A318/A319/A320/A321
TECHNICAL TRAINING MANUAL

DEBRIEFING SCHEMATICS - T1+T2 CFM 56

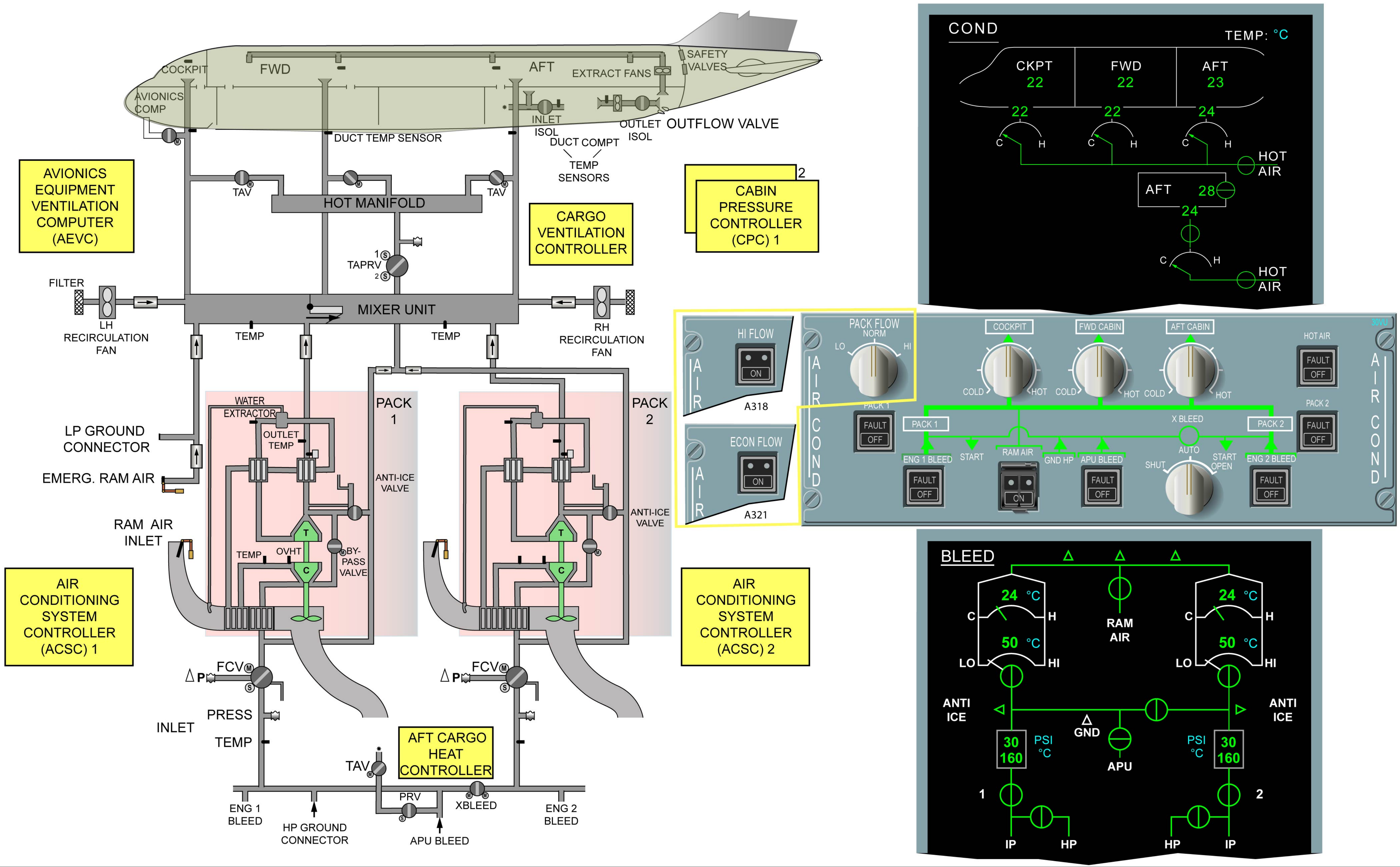

U670481_CFM56 - U3QT0T0 - UM21IADEBRIEF02

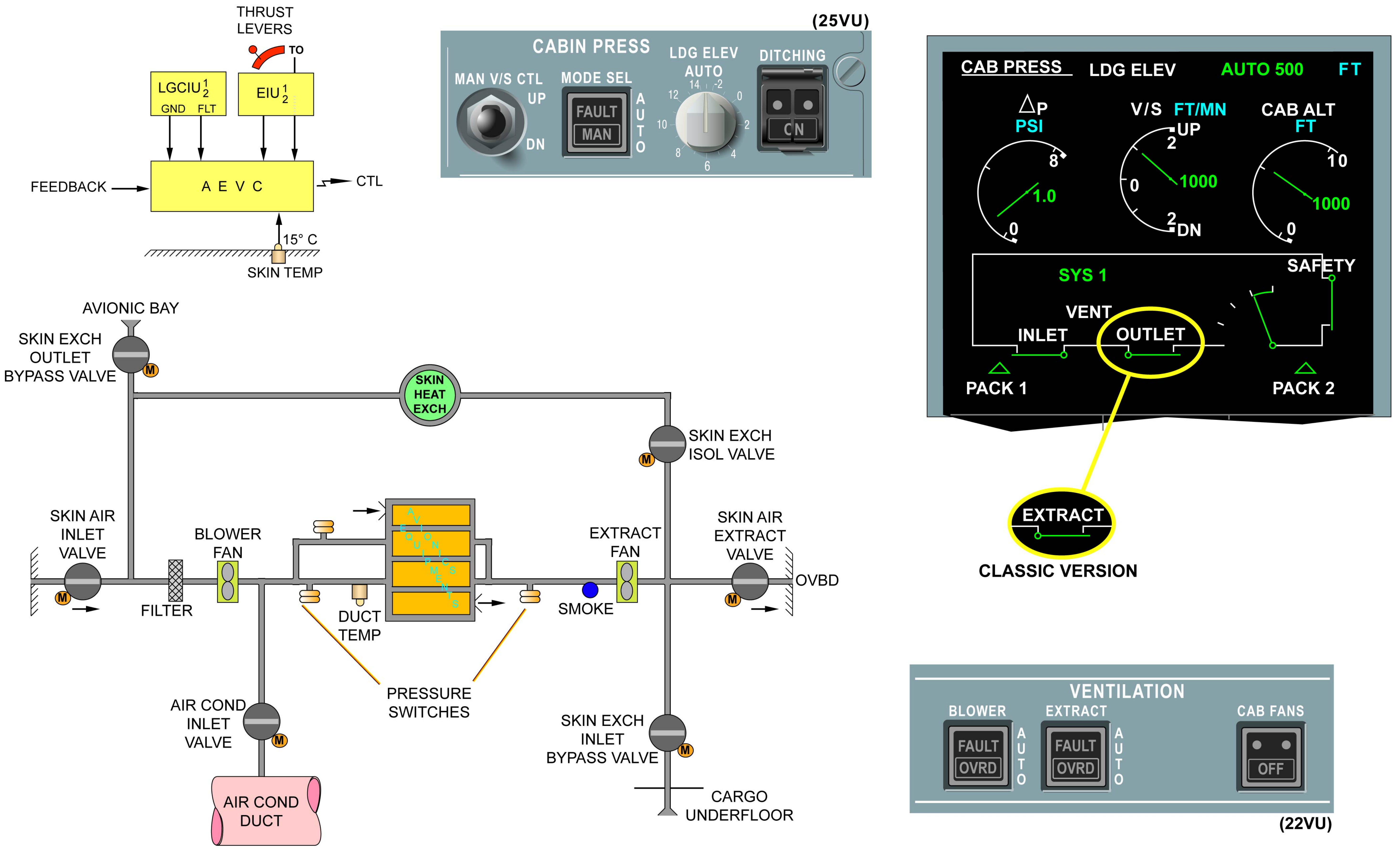

U670481_CFM56 - U3QT0T0 - UM21IBDEBRIEF01

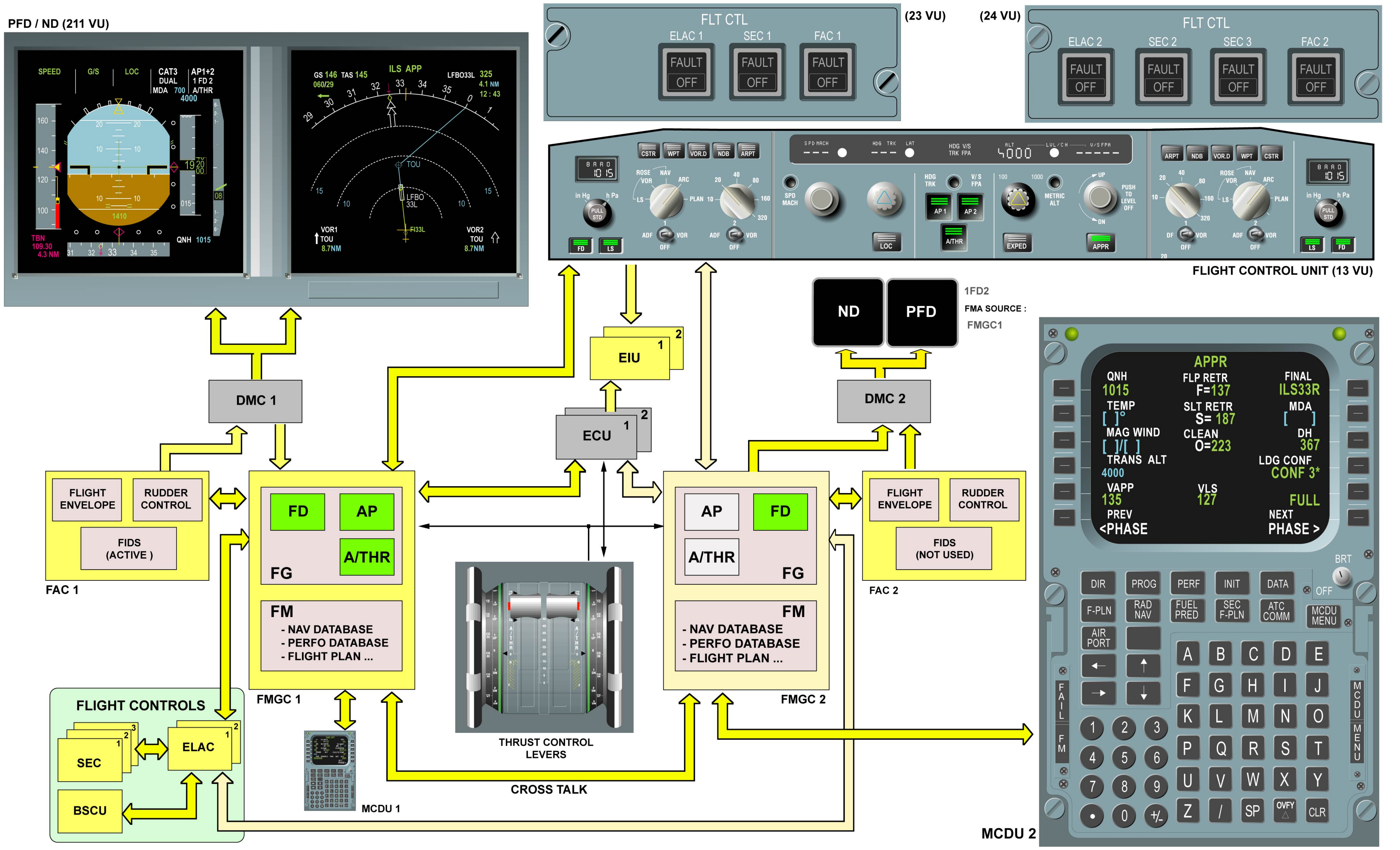

U670481_CFM56 - U3QT0T0 - UM22IADEBRIEF01

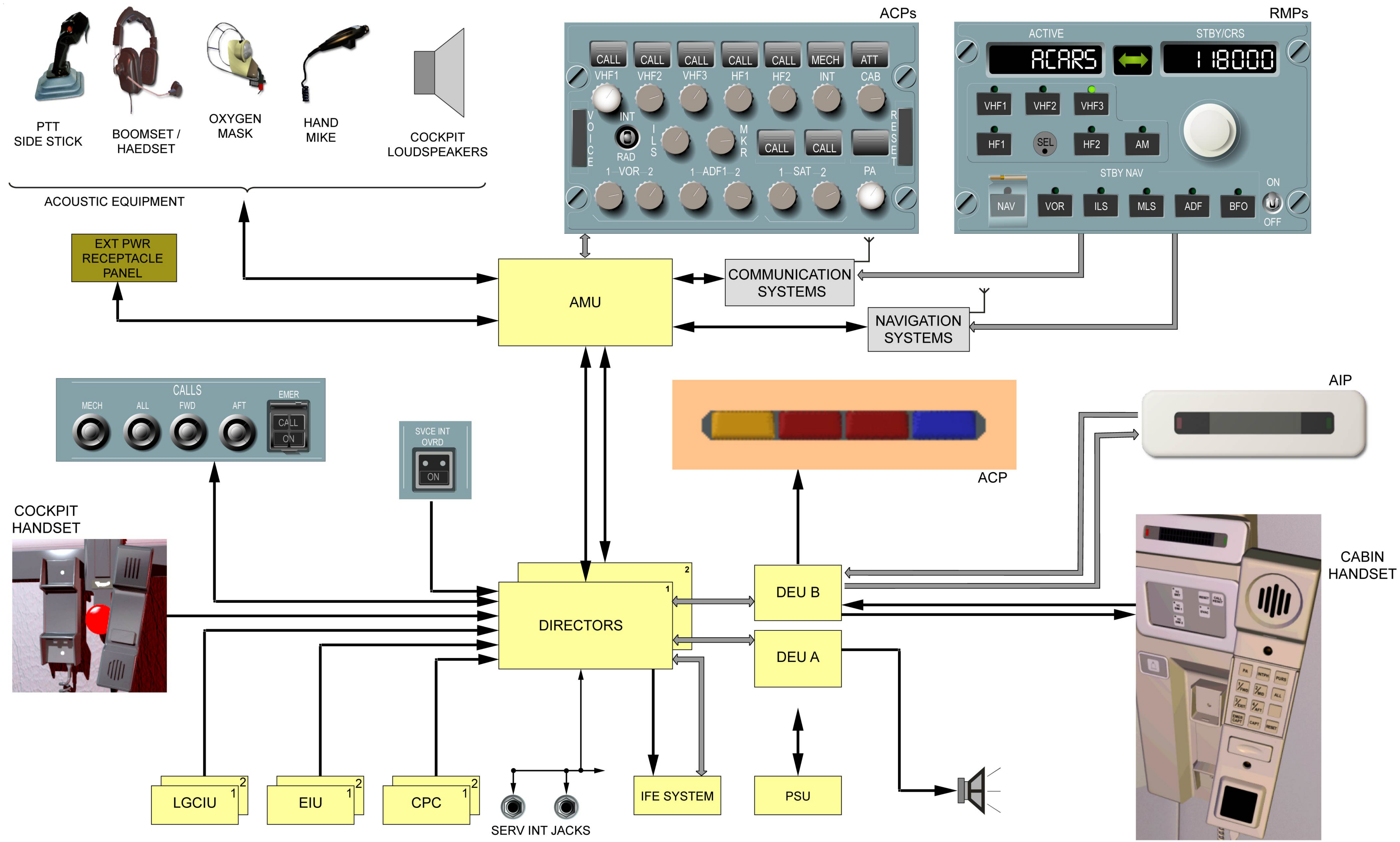

U670481_CFM56 - U3QT0T0 - UM23IADEBRIEF01

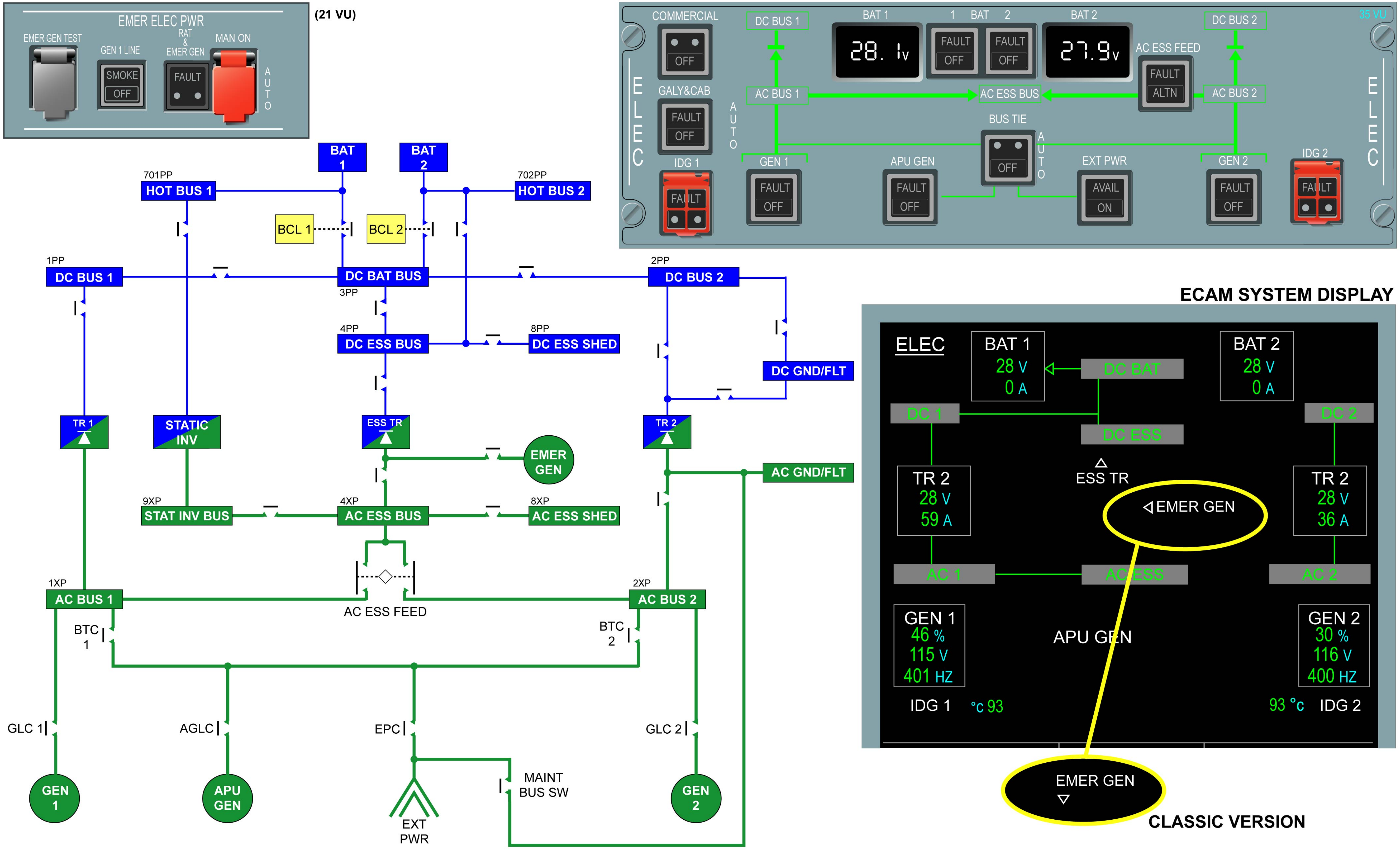

U670748I_CFM56 - U3QT0T0 - UM24IADEBRIEF01

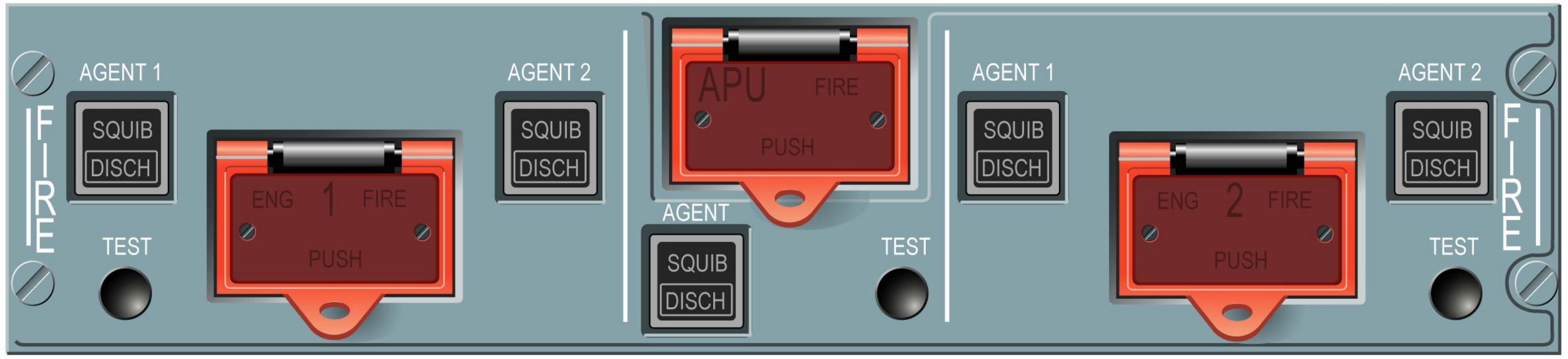

(20 VU)

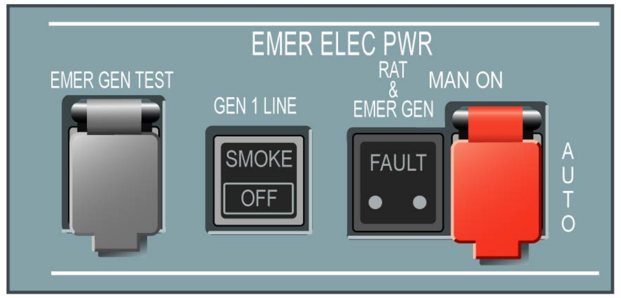

(21 VU)

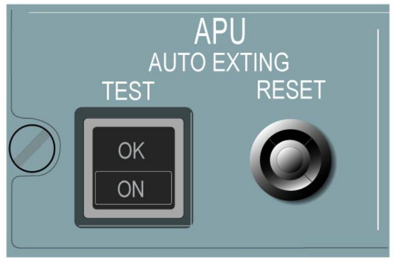

MAINTENANCE PANEL (50VU)

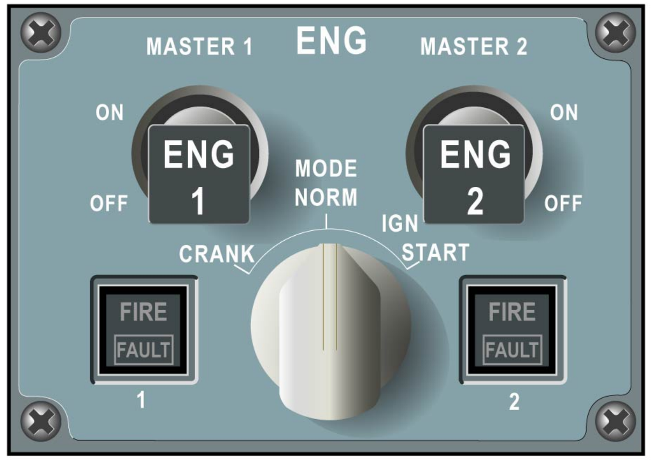

ENG START PANEL (115VU)

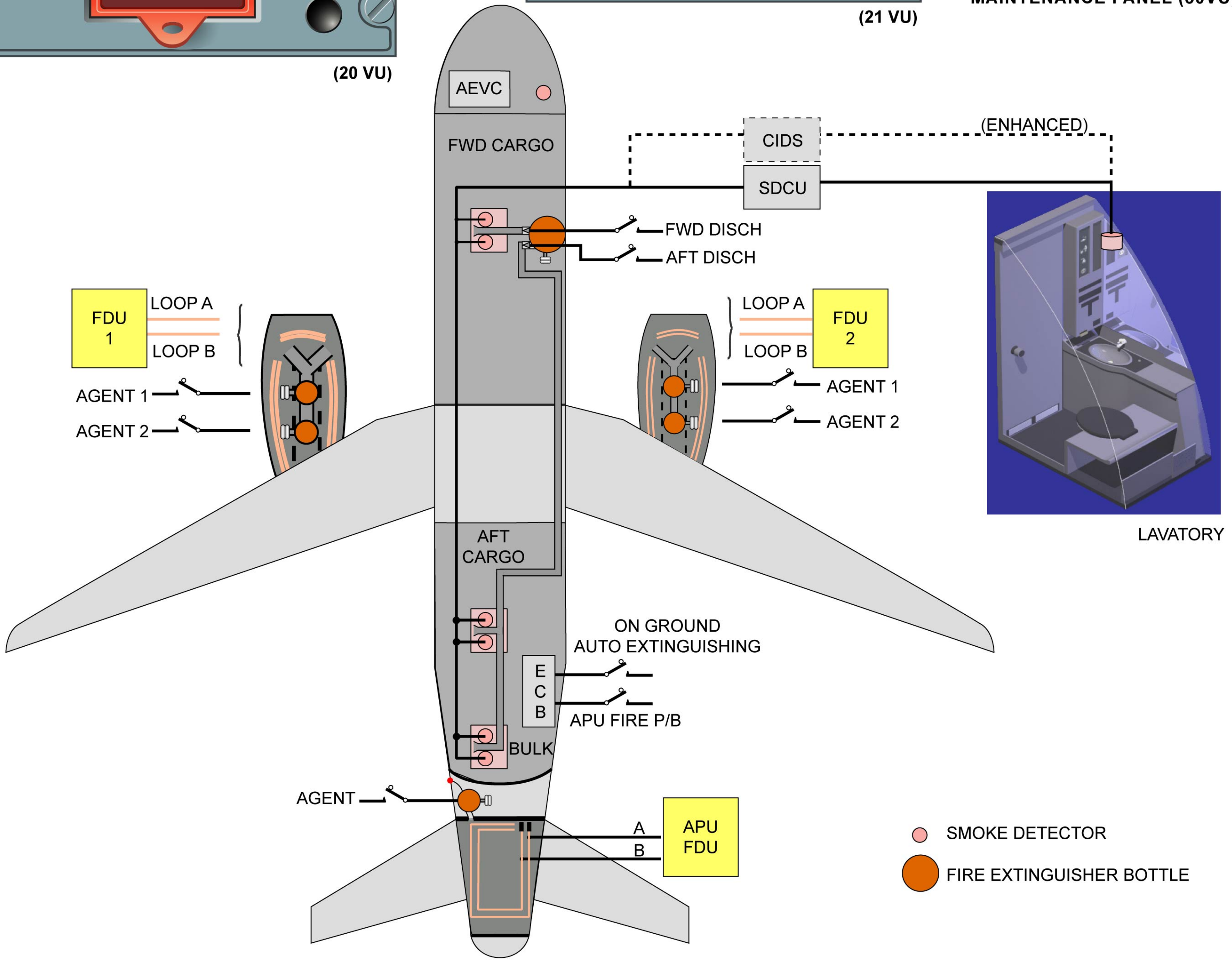

(22 VU)

U670748I_CFM56 - U3QT0T0 - UM26IADEBRIEF01

(23VU)

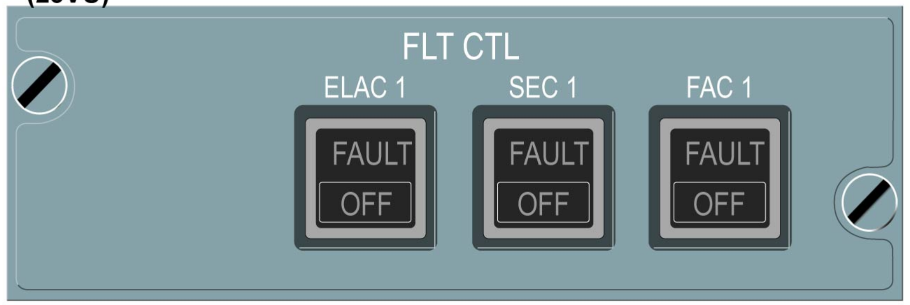

(24VU)

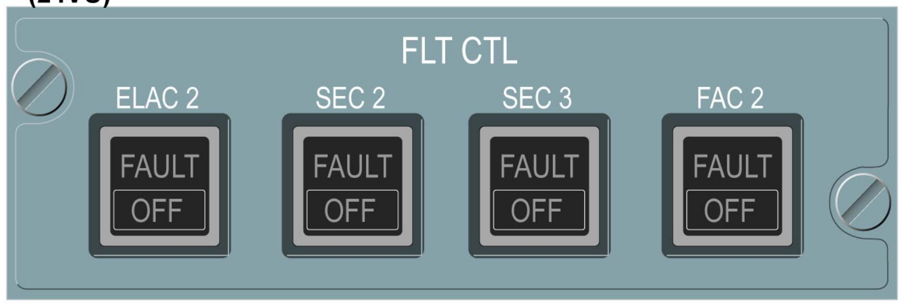

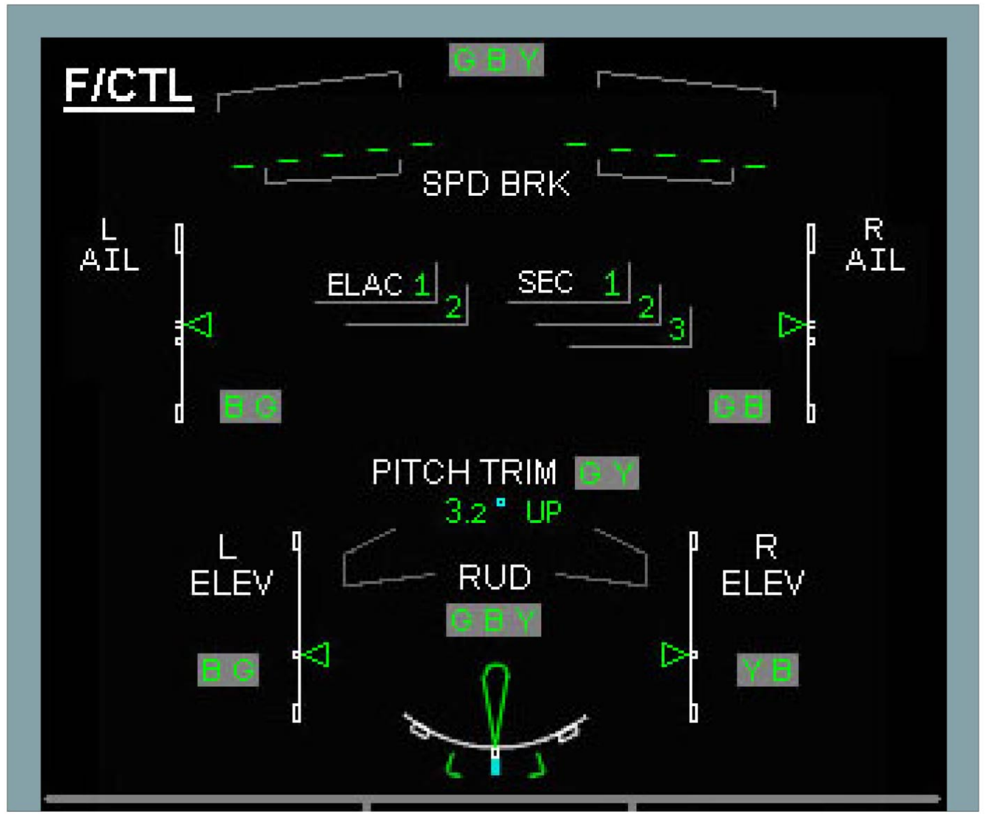

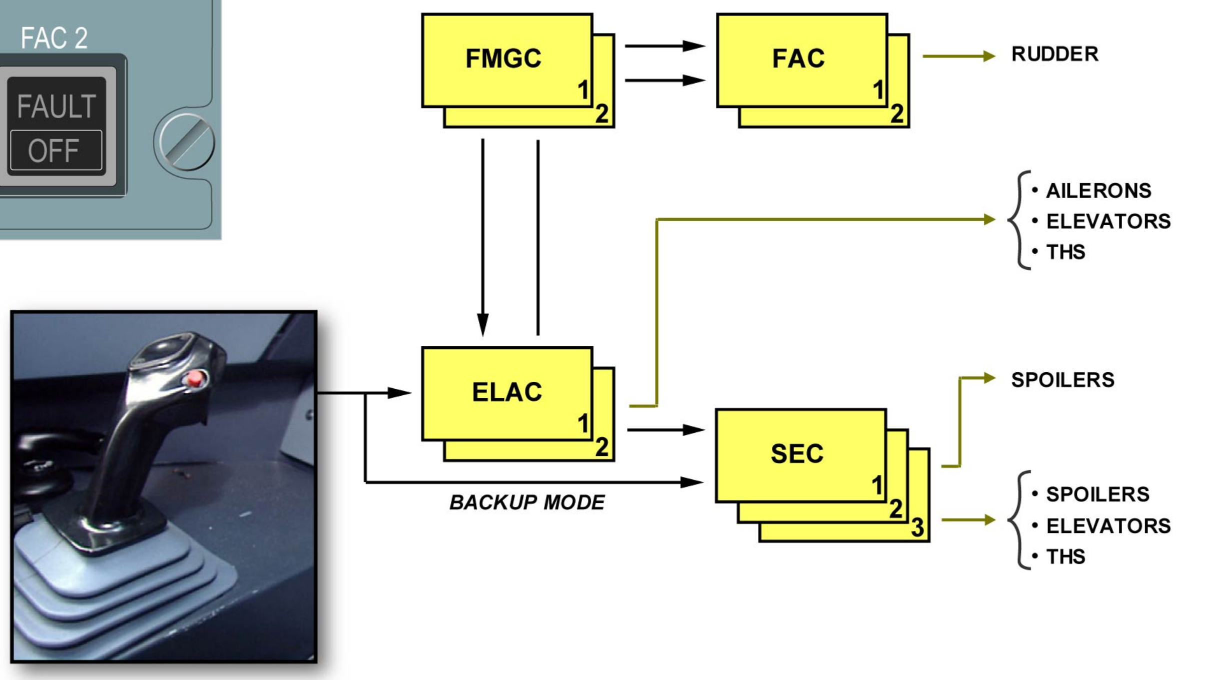

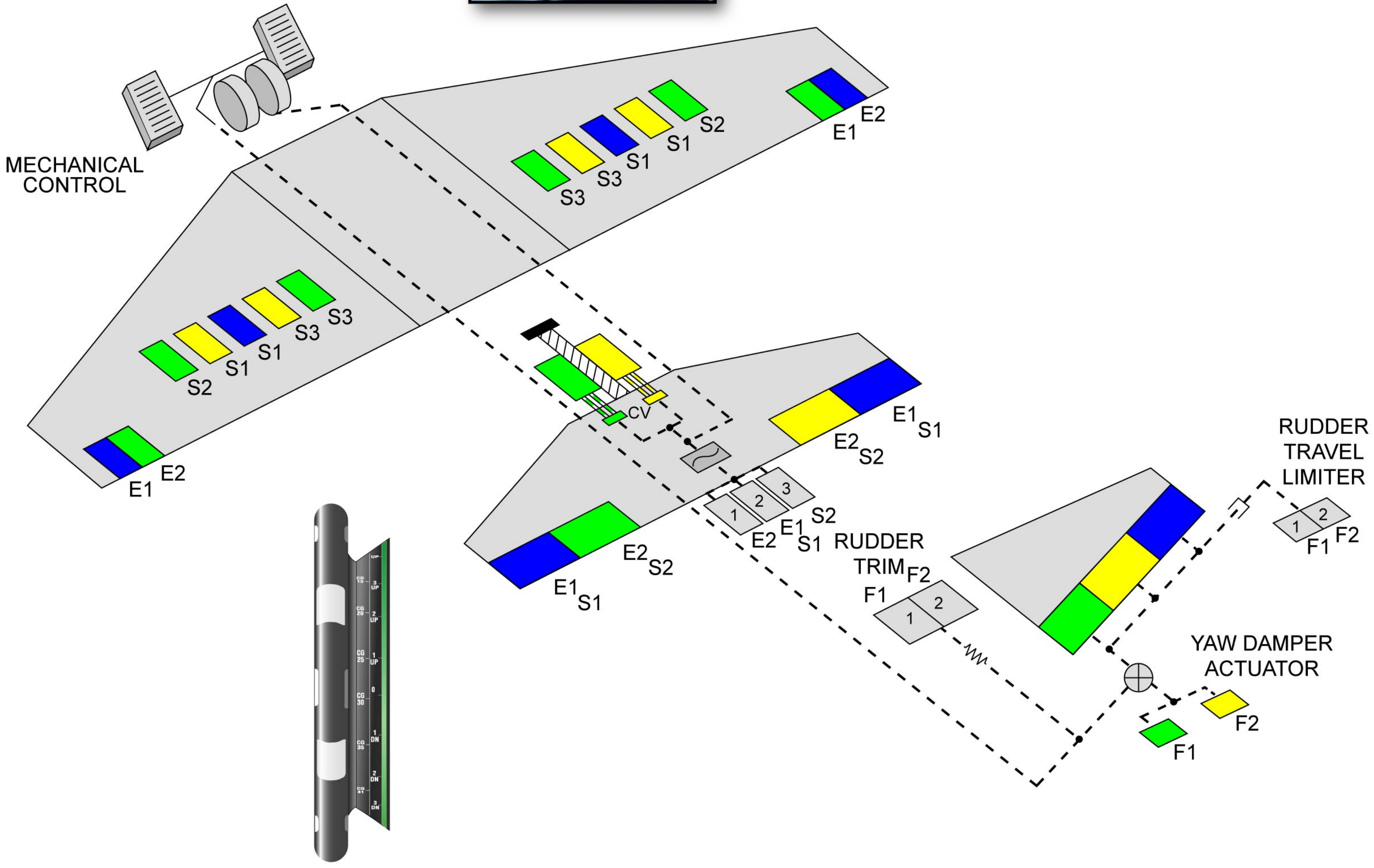

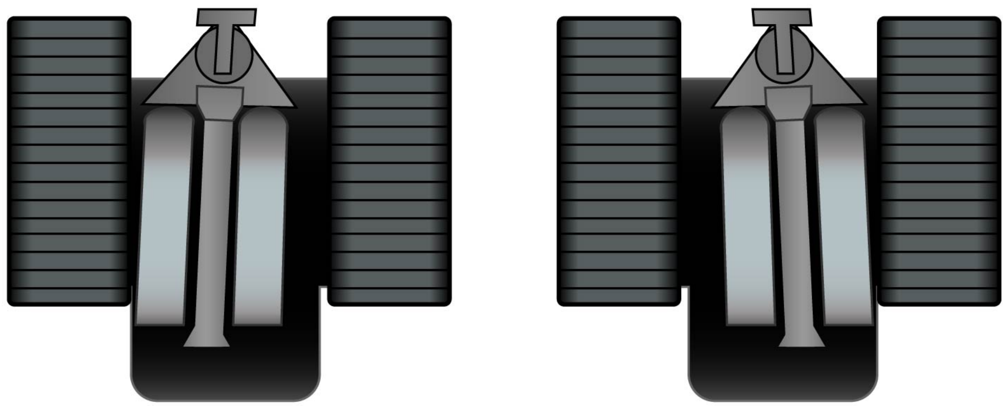

U670748I_CFM56 - U3QT0T0 - UM27IADEBRIEF01

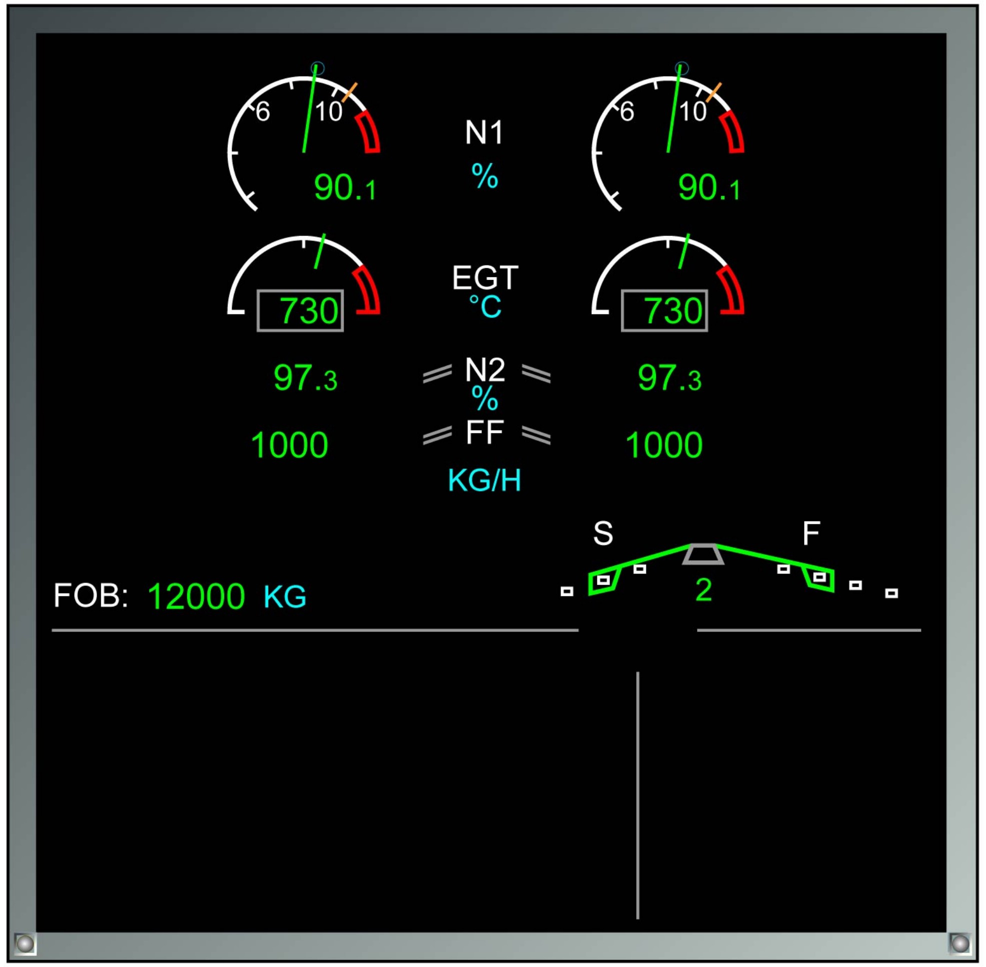

EWD

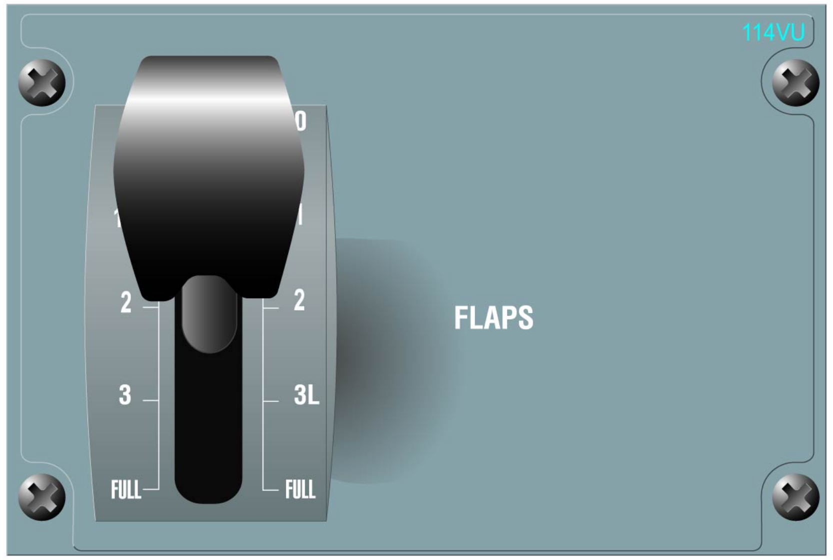

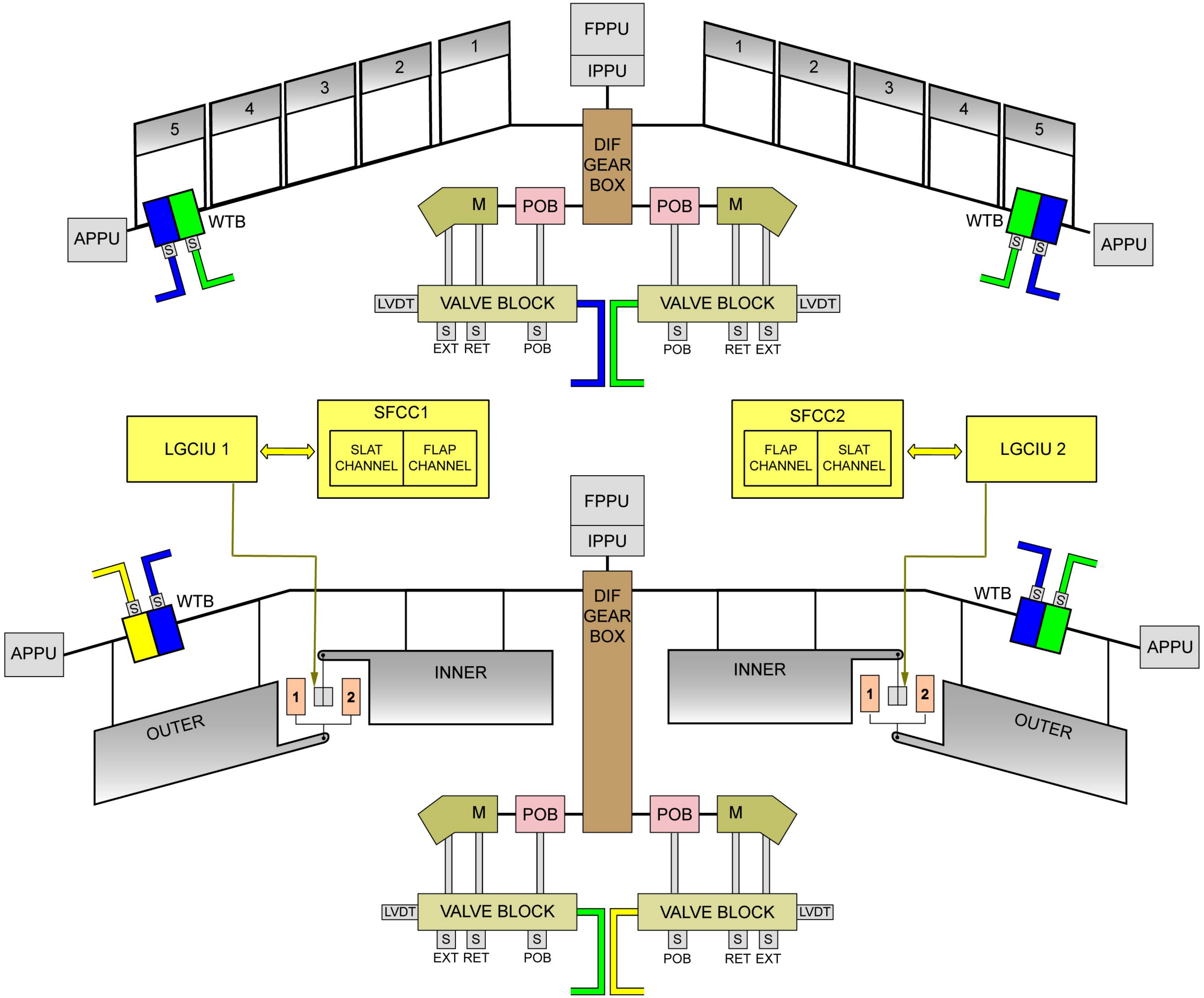

U670748I_CFM56 - U3QT0T0 - UM27IBDEBRIEF01

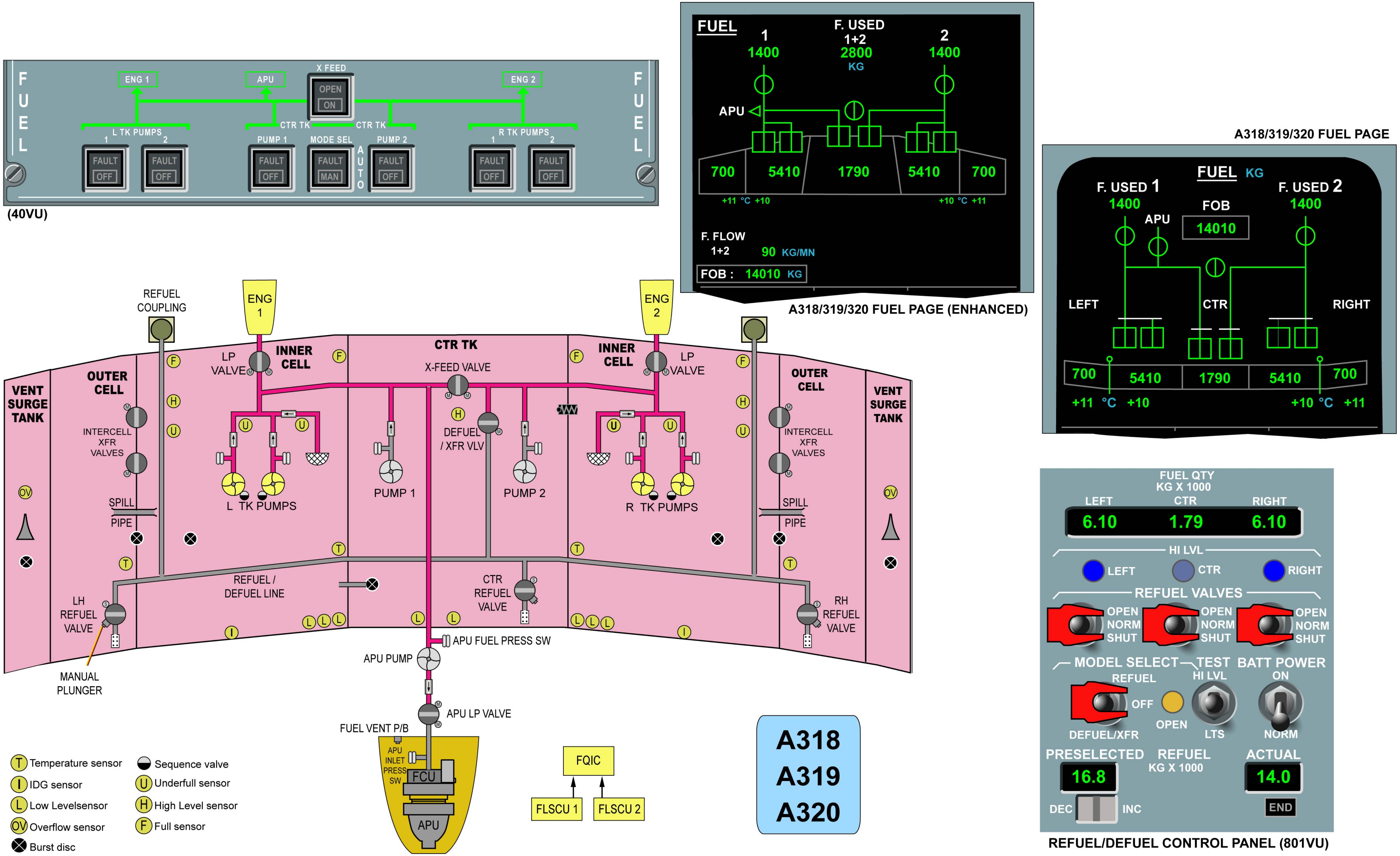

U670781_CFM56 - U3QT0T0 - UM28IADEBRIEF02

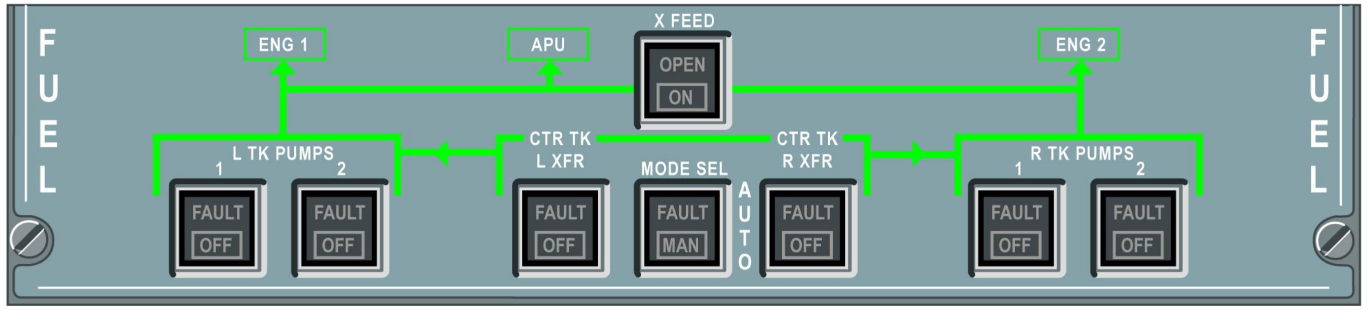

(40VU)

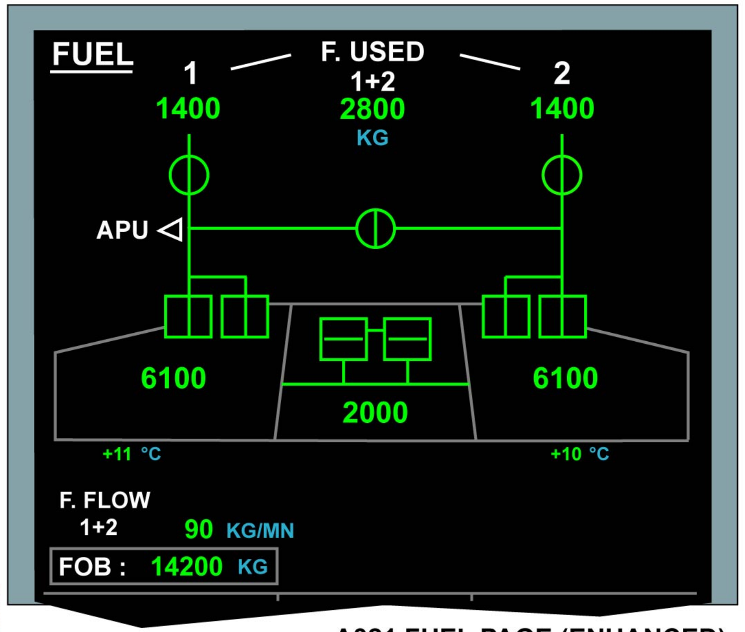

A321 FUEL PAGE (ENHANCED)

A321 FUEL PAGE

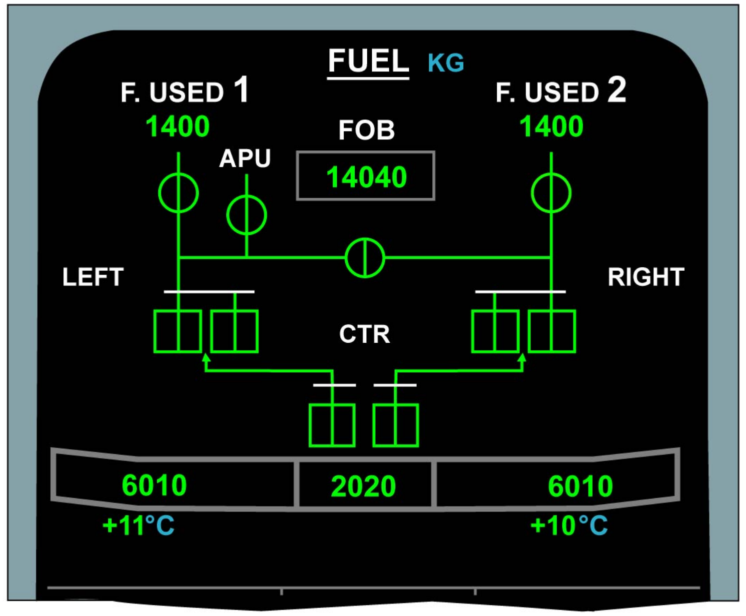

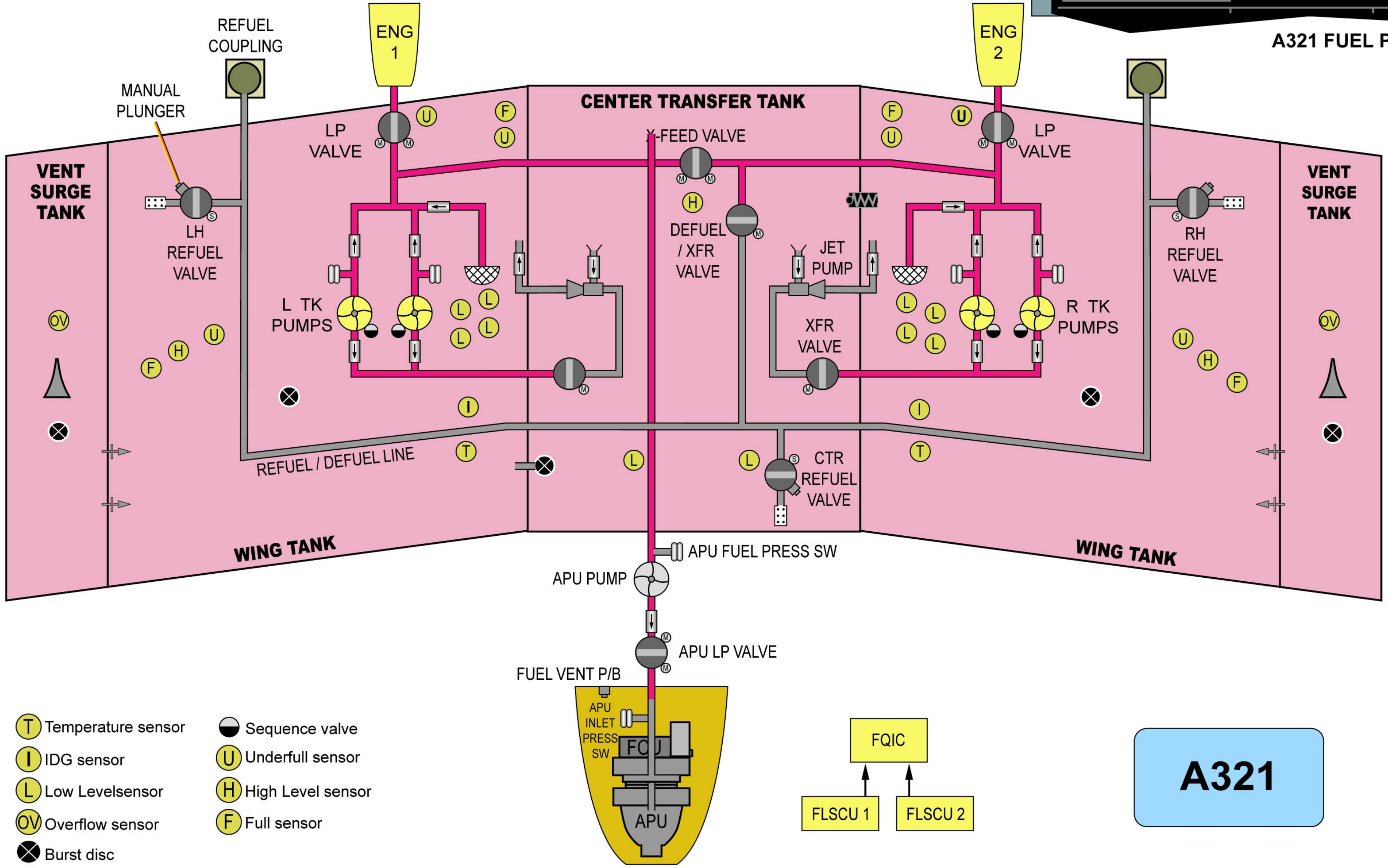

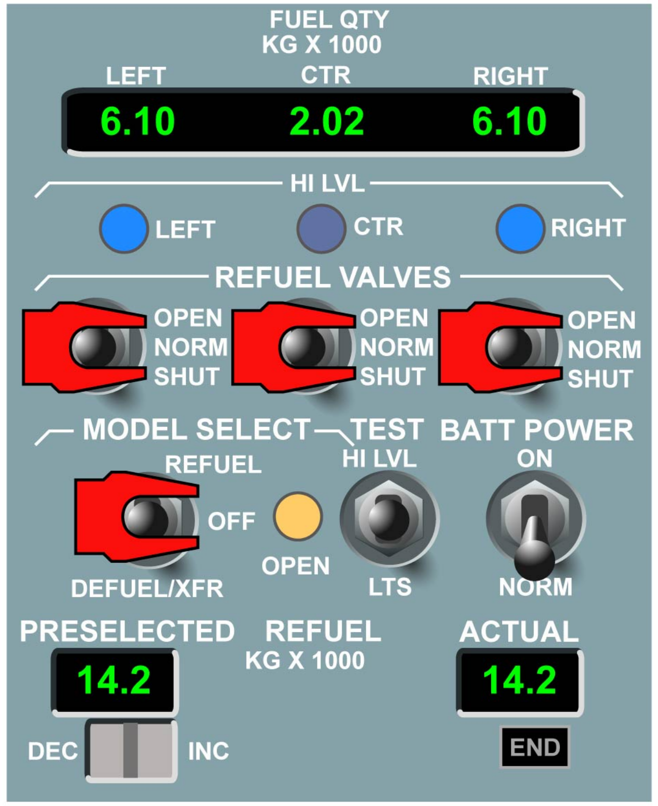

REFUEL/DEFUEL CONTROL PANEL (801VU)

U670481_CFM56 - U3QT0T0 - UM28IADEBRIEF03

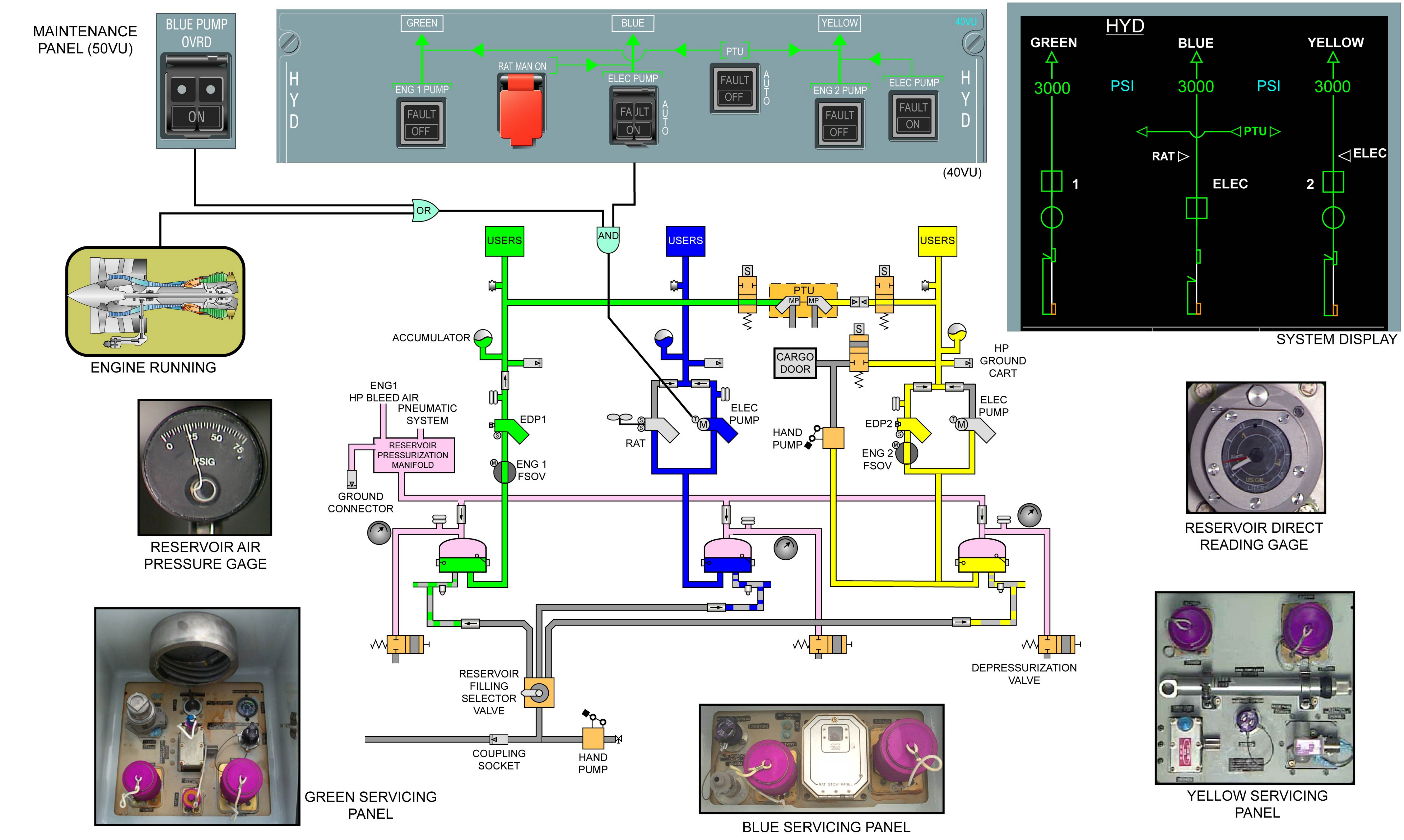
MAINTENANCE PANEL (50VU)
BLUE PUMP OVRD
ON
GREEN
BLUE
YELLOW
40VU
HYD
RAT MAN ON
PTU
ENG 1 PUMP
FAULT
OFF
ELEC PUMP
FAULT
ON
AUTO
ENG 2 PUMP
ELEC PUMP
(40VU)
OR
AND
HYD
GREEN
BLUE
YELLOW
3000
PSI
PTU
RAT
ELEC
1
2
SYSTEM DISPLAY
ENGINE RUNNING
USERS
ACCUMULATOR
ENG1 HP BLEED AIR
PNEUMATIC SYSTEM
RESERVOIR PRESSURIZATION MANIFOLD
GROUND CONNECTOR
EDP1
ENG 1 FSOV
RAT
ELEC PUMP
CARGO DOOR
HAND PUMP
EDP2
ENG 2 FSOV
HP GROUND CART
PSIG
RESERVOIR AIR PRESSURE GAGE
RESERVOIR DIRECT READING GAGE
RESERVOIR FILLING SELECTOR VALVE
COUPLING SOCKET
HAND PUMP
DEPRESSURIZATION VALVE
GREEN SERVICING PANEL
BLUE SERVICING PANEL
YELLOW SERVICING PANEL

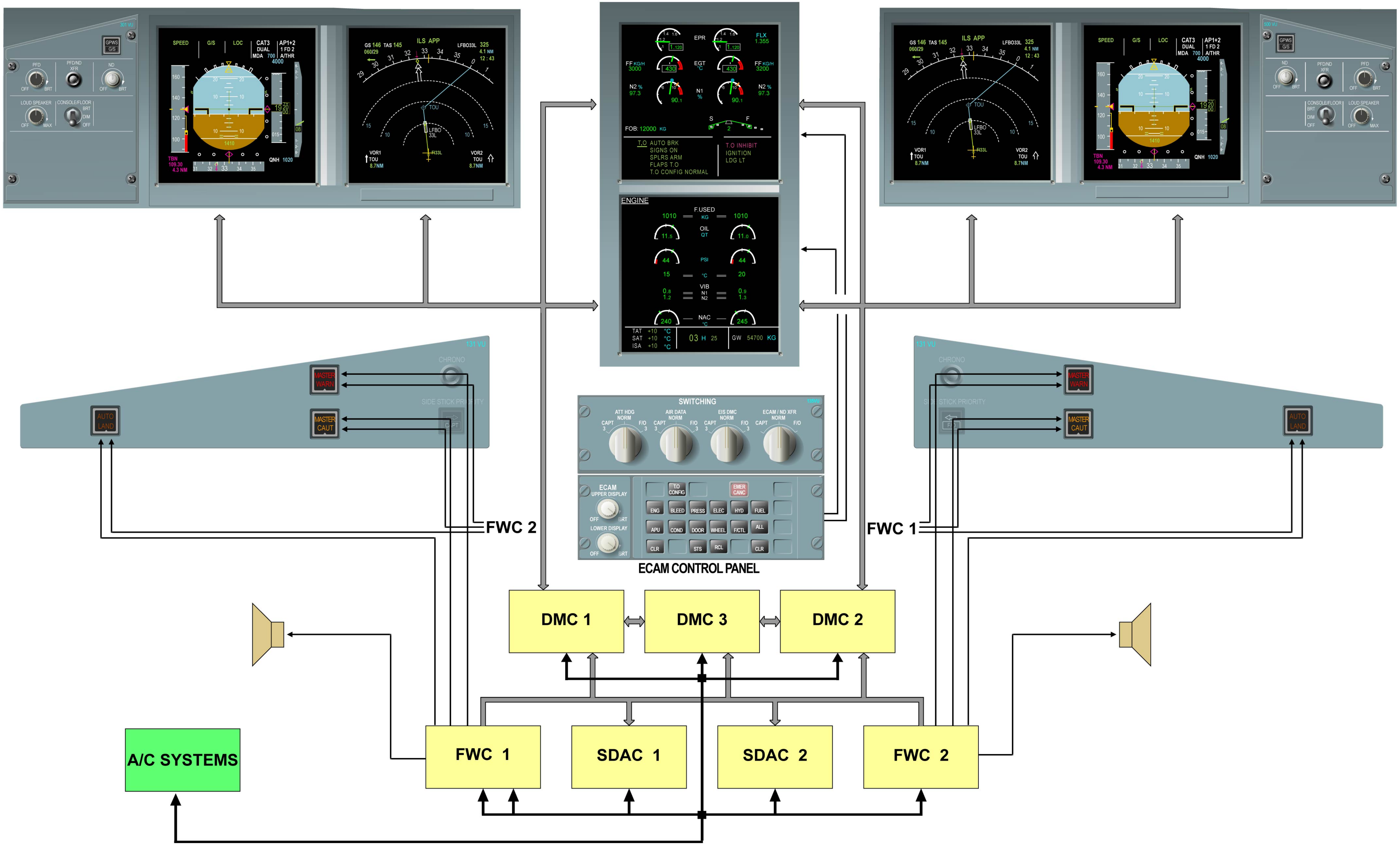

U670748l_CFM56 - U3QT0T0 - UM31IADEBRIEF02

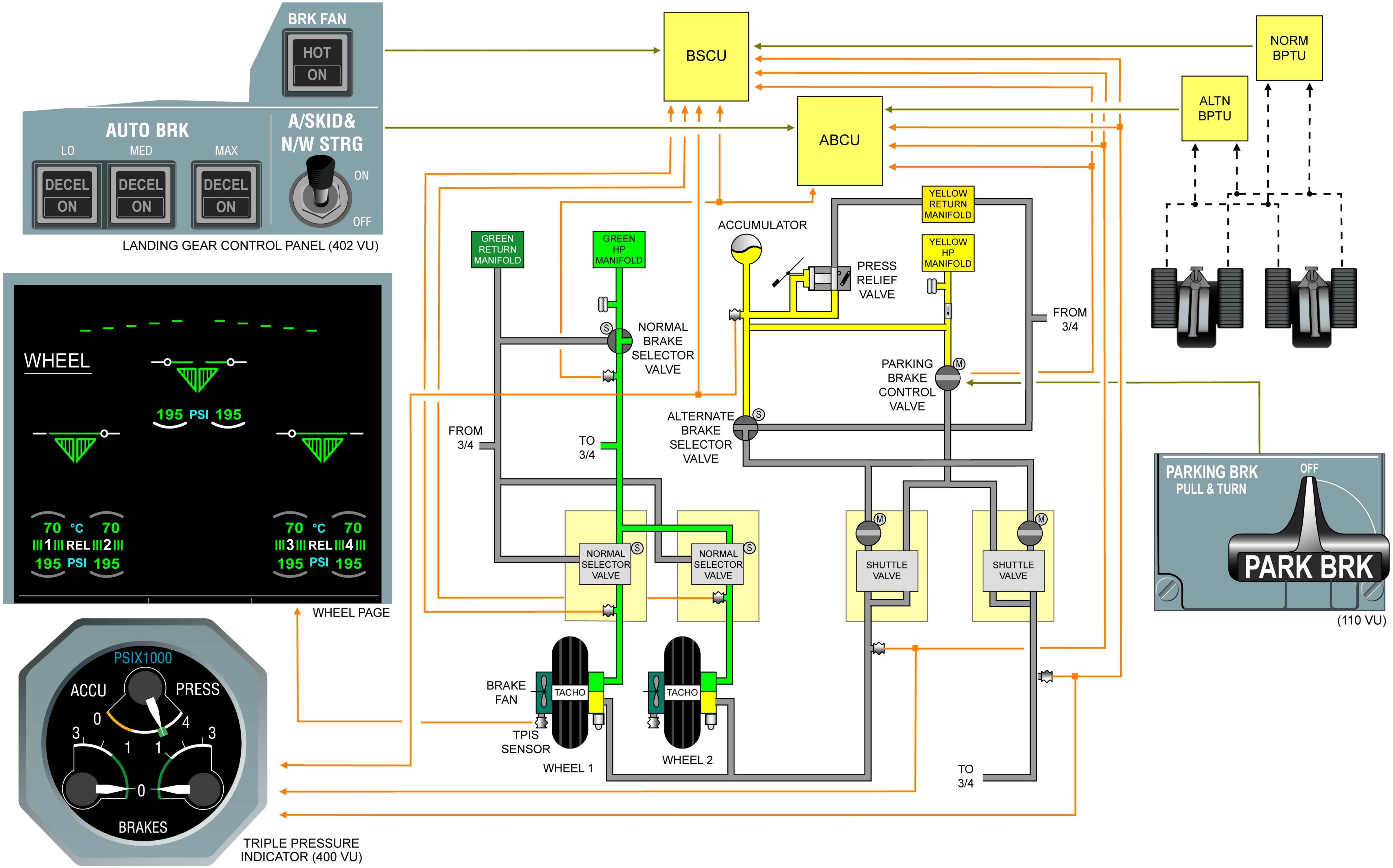
BRK FAN
HOT
ON
AUTO BRK
LO
MED
MAX
DECEL
ON
A/SKID&
N/W STRG
ON
OFF
LANDING GEAR CONTROL PANEL (402 VU)
WHEEL
195 PSI 195
70 °C 70
1 REL 2
195 PSI 195
70 °C 70
3 REL 4
195 PSI 195
WHEEL PAGE
PSIX1000
ACCU
PRESS
BRAKES
TRIPLE PRESSURE
INDICATOR (400 VU)
BSCU
ABCU
NORM
BPTU
ALTN
BPTU
GREEN
RETURN
MANIFOLD
GREEN
HP
MANIFOLD
ACCUMULATOR
PRESS
RELIEF
VALVE
YELLOW
RETURN
MANIFOLD
YELLOW
HP
MANIFOLD
NORMAL
BRAKE
SELECTOR
VALVE
FROM
3/4
PARKING
BRAKE
CONTROL
VALVE
ALTERNATE
BRAKE
SELECTOR
VALVE
FROM
3/4
TO
3/4
NORMAL
SELECTOR
VALVE
NORMAL
SELECTOR
VALVE
SHUTTLE
VALVE
SHUTTLE
VALVE
PARKING BRK
PULL & TURN
OFF
PARK BRK
(110 VU)
BRAKE
FAN
TACHO
TACHO
TPIS
SENSOR
WHEEL 1
WHEEL 2
TO
3/4

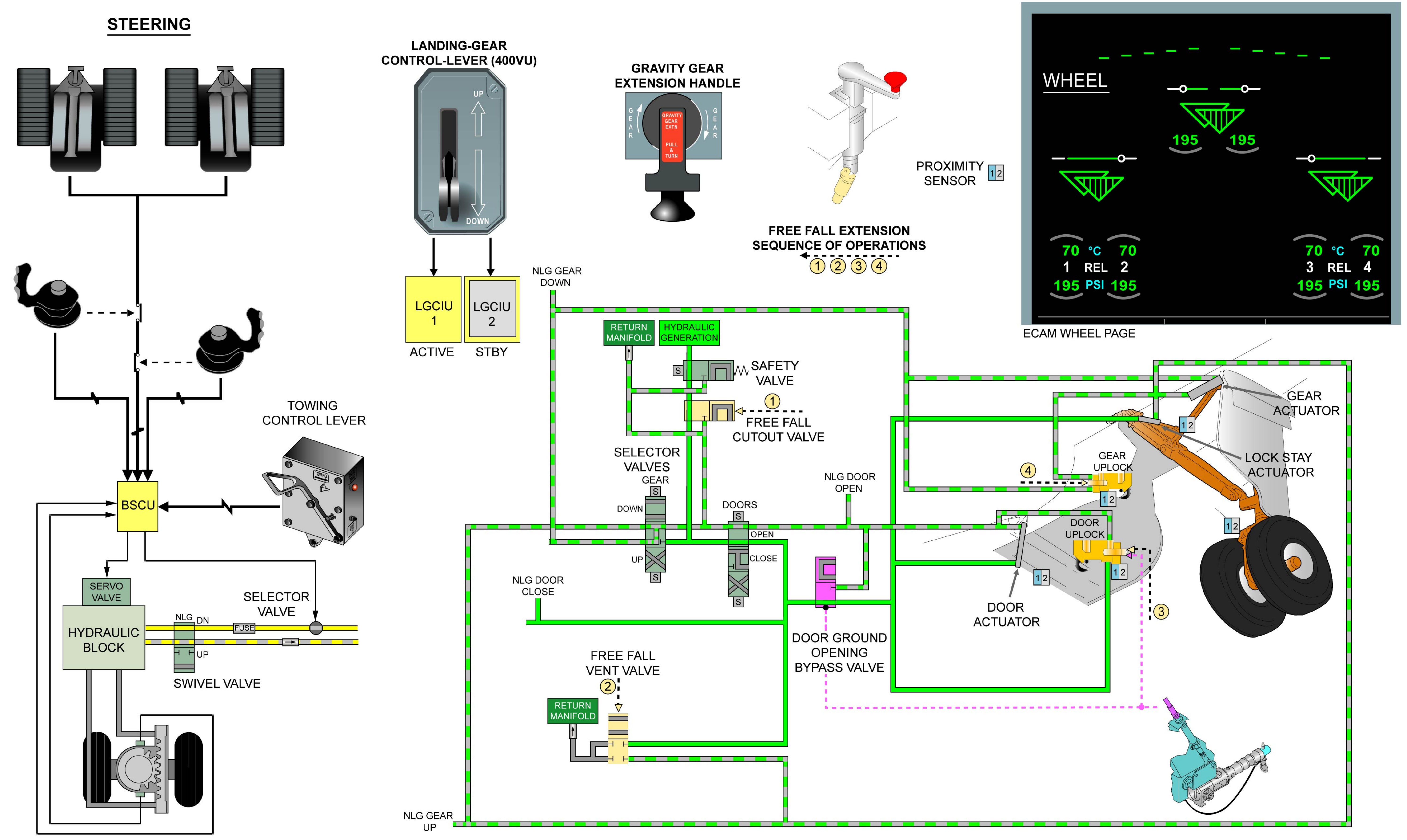

U670481_CFM56 - U3QT0T0 - UM32IBDEBRIEF02

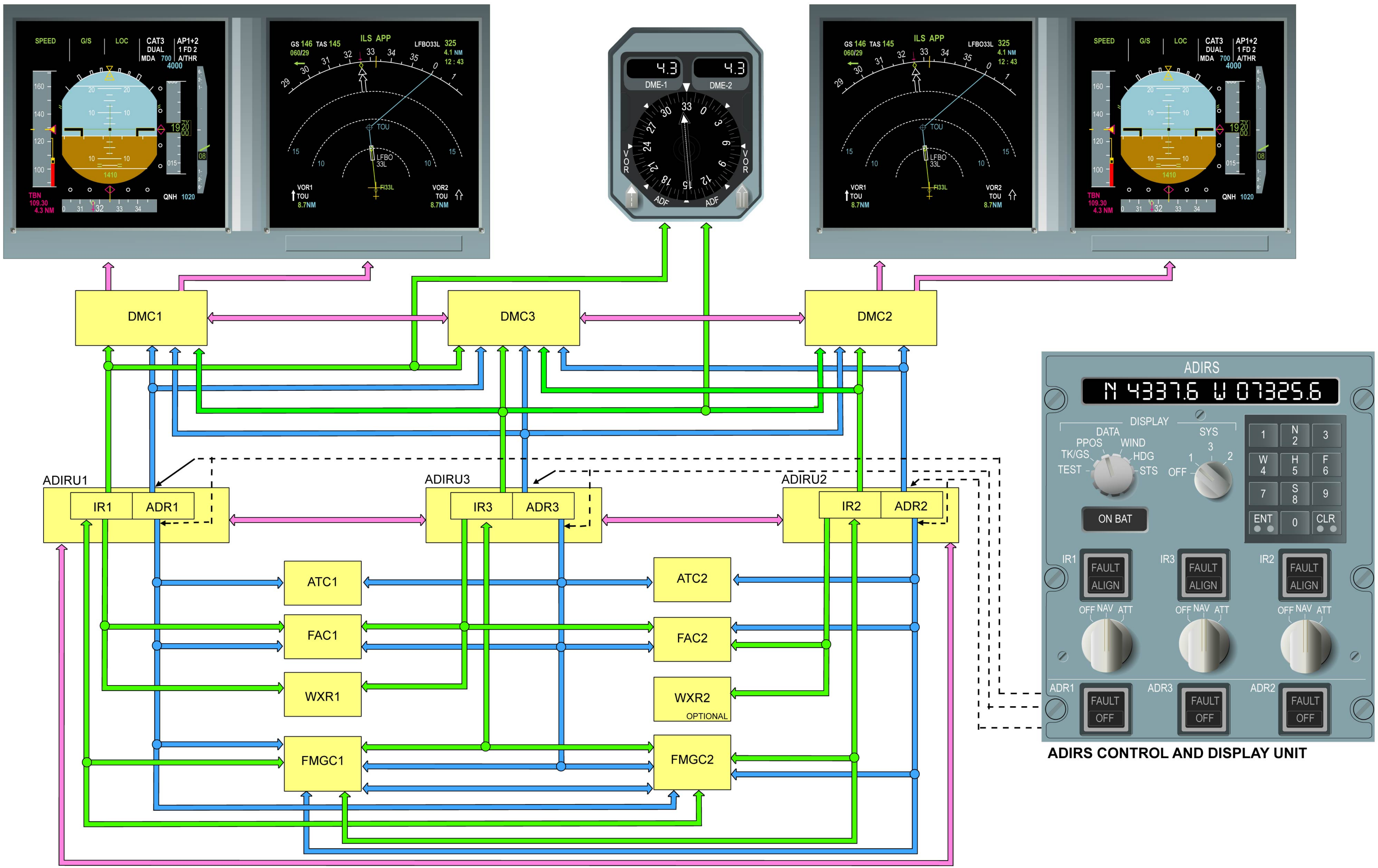

ADIRS CONTROL AND DISPLAY UNIT

(25VU)

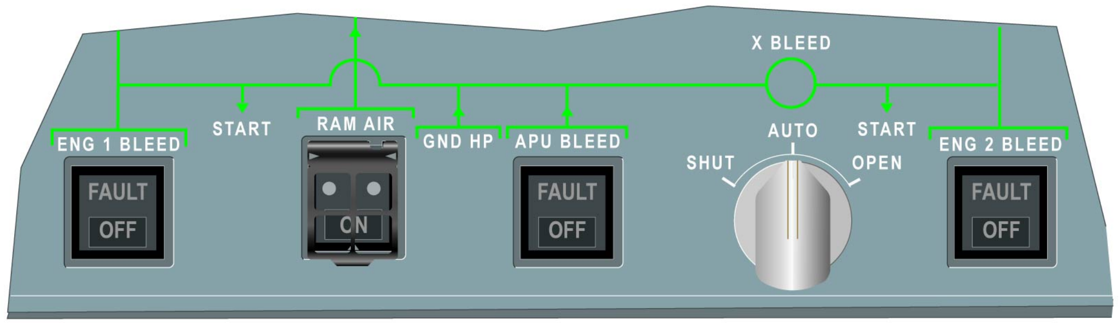

AIR COND PANEL (30VU)

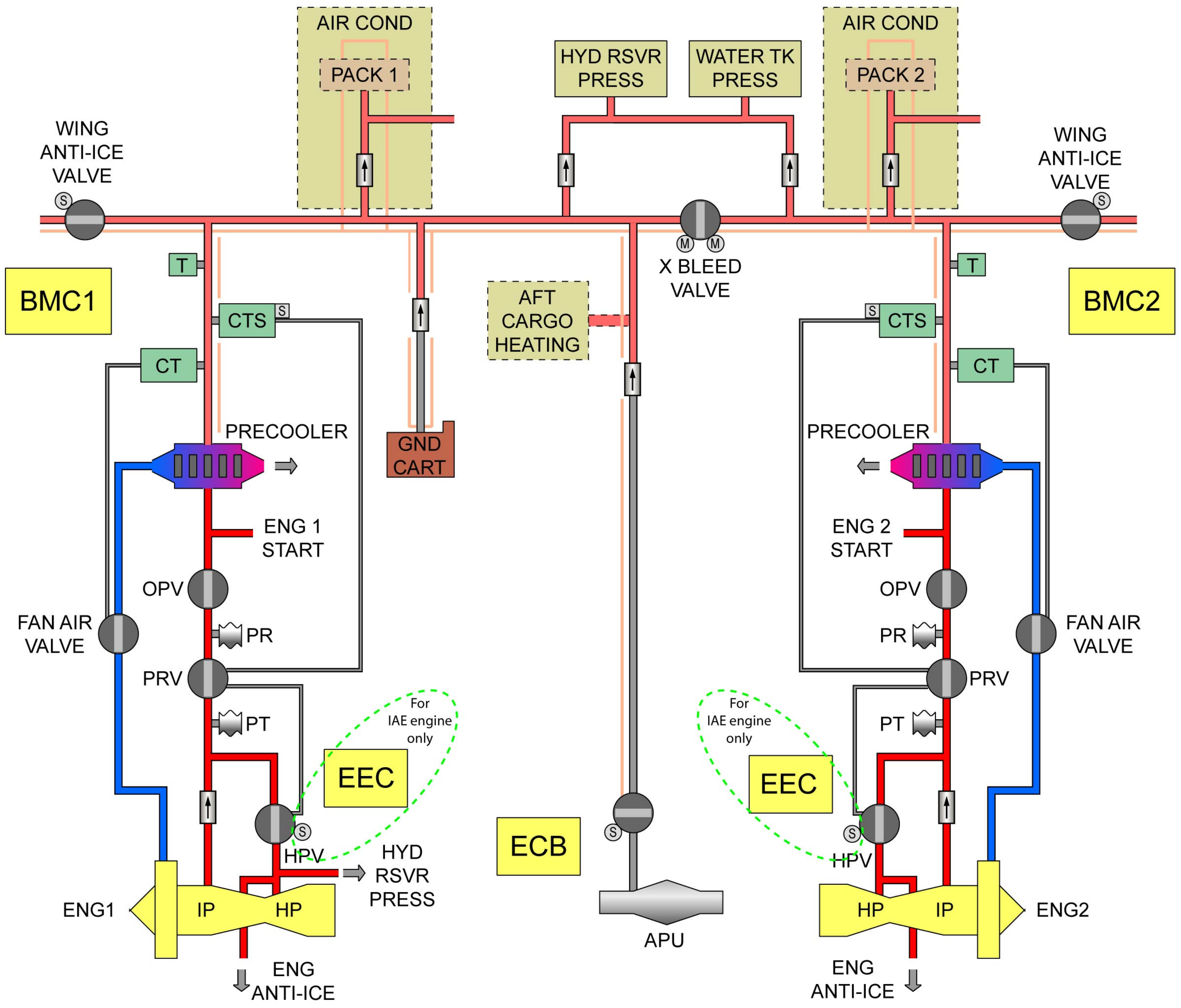

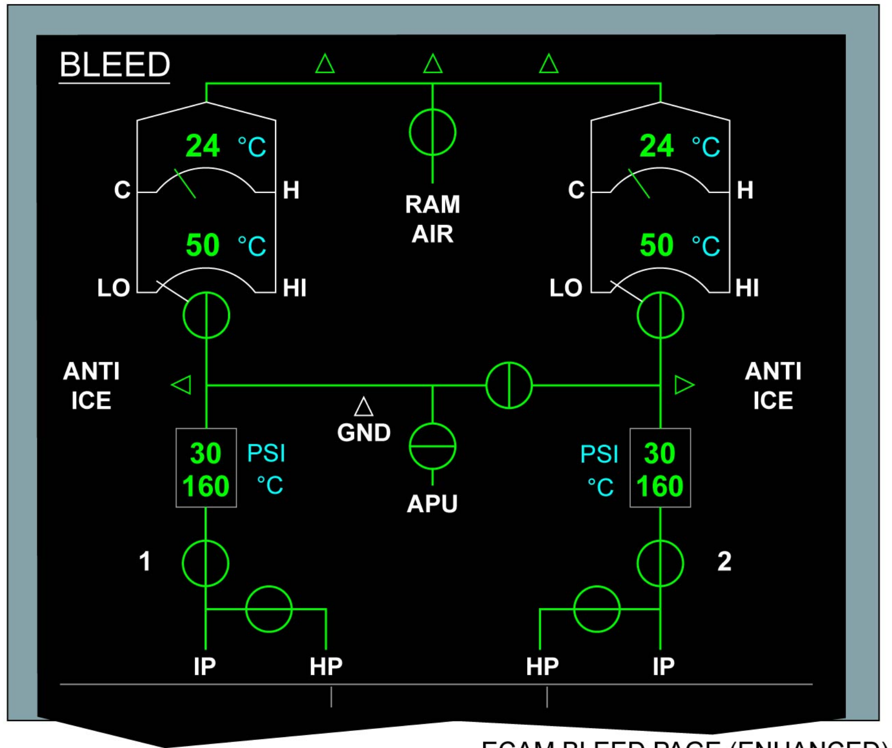

ECAM BLEED PAGE (ENHANCED)

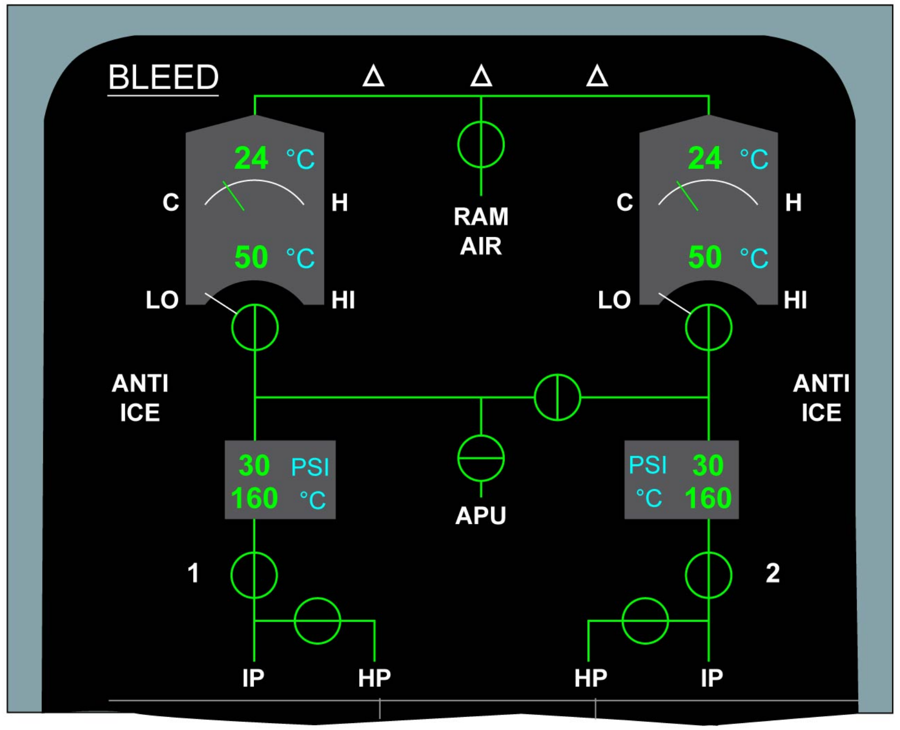

ECAM BLEED PAGE

U670741_CFM56 - U3QT0T0 - UM36IADEBRIEF02

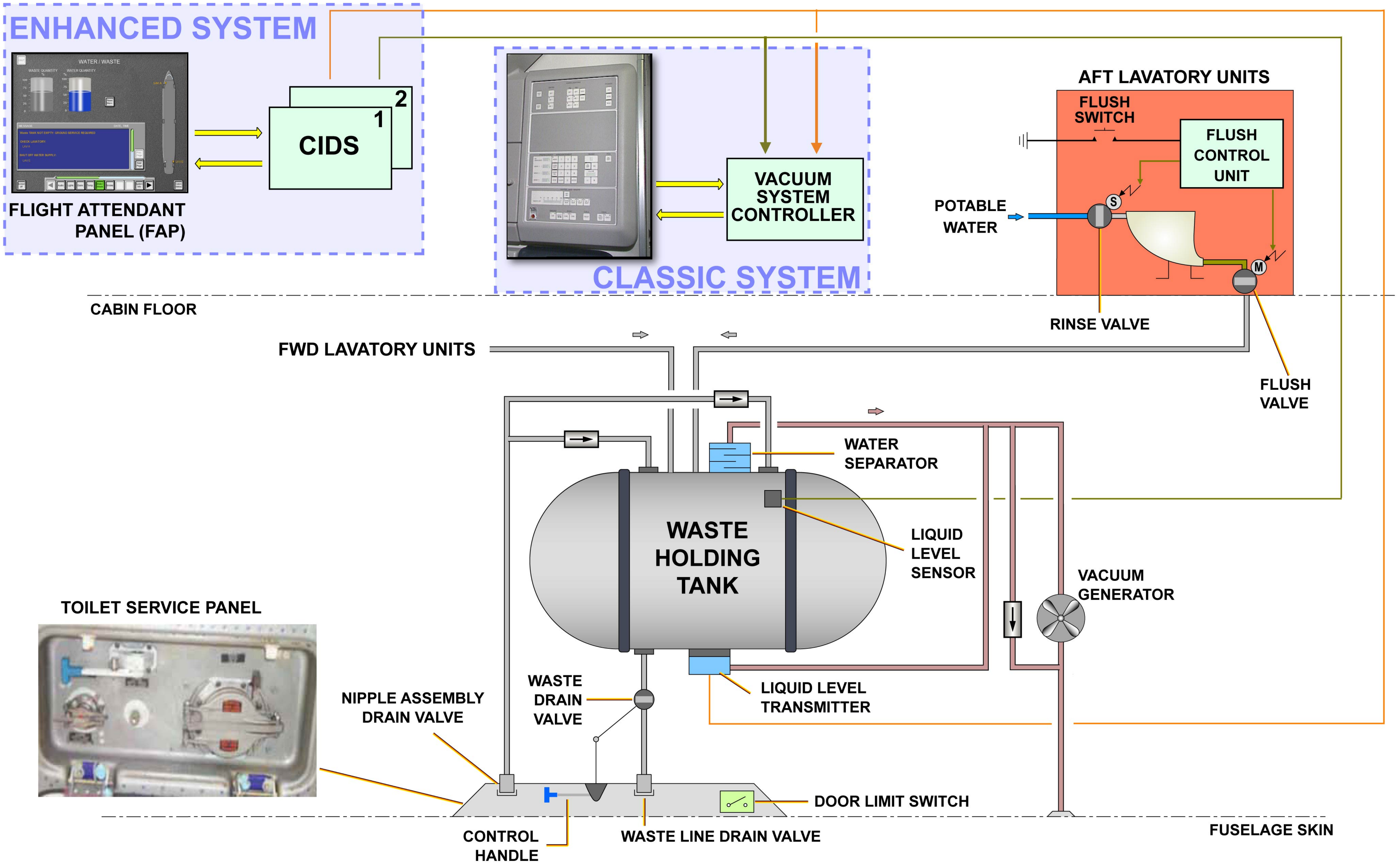

U670781_CFM56 - U3QT0T0 - UM38IADEBRIEF01

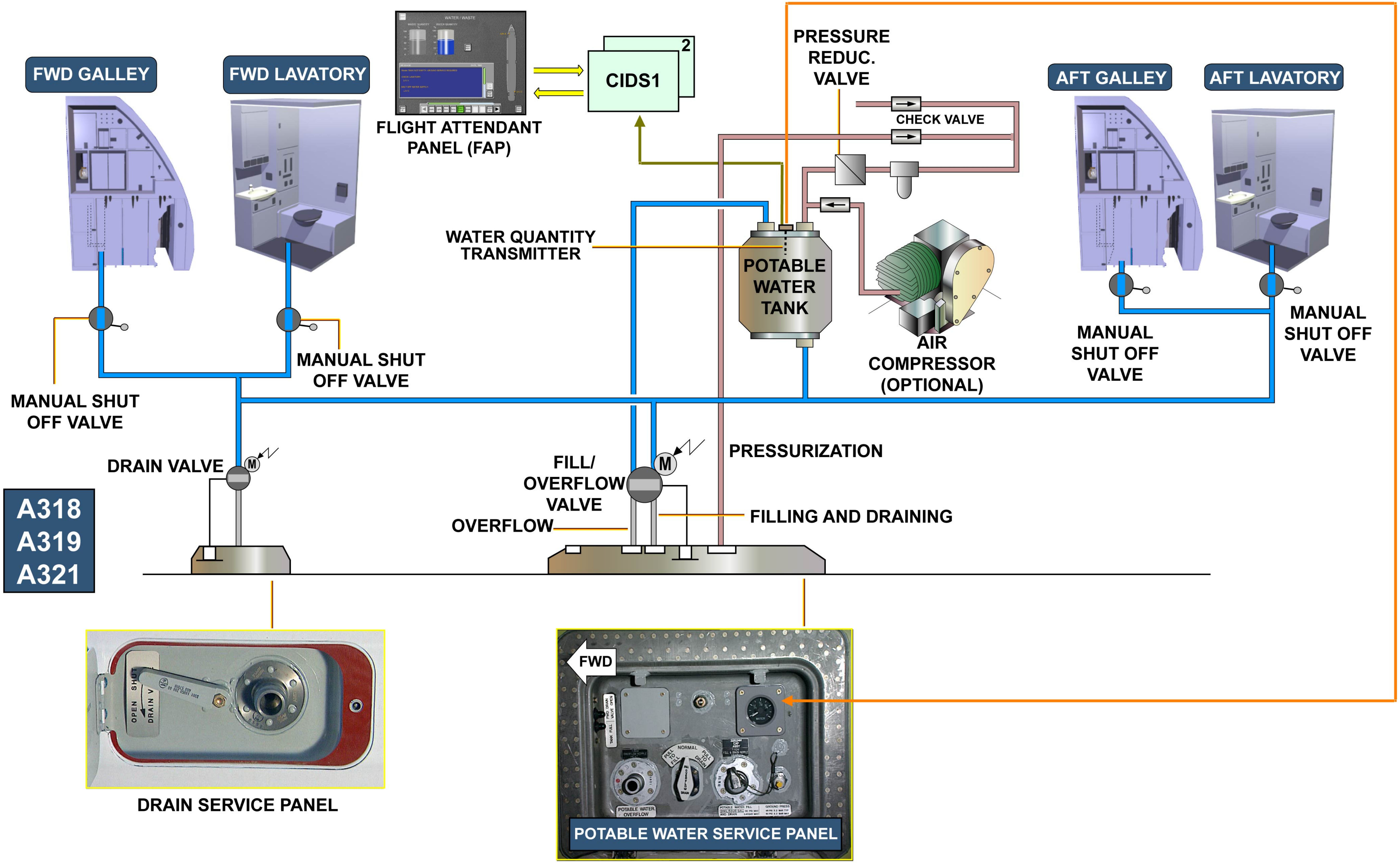

U670748I_CFM56 - U3QT0T0 - UM38IBDEBRIEF01

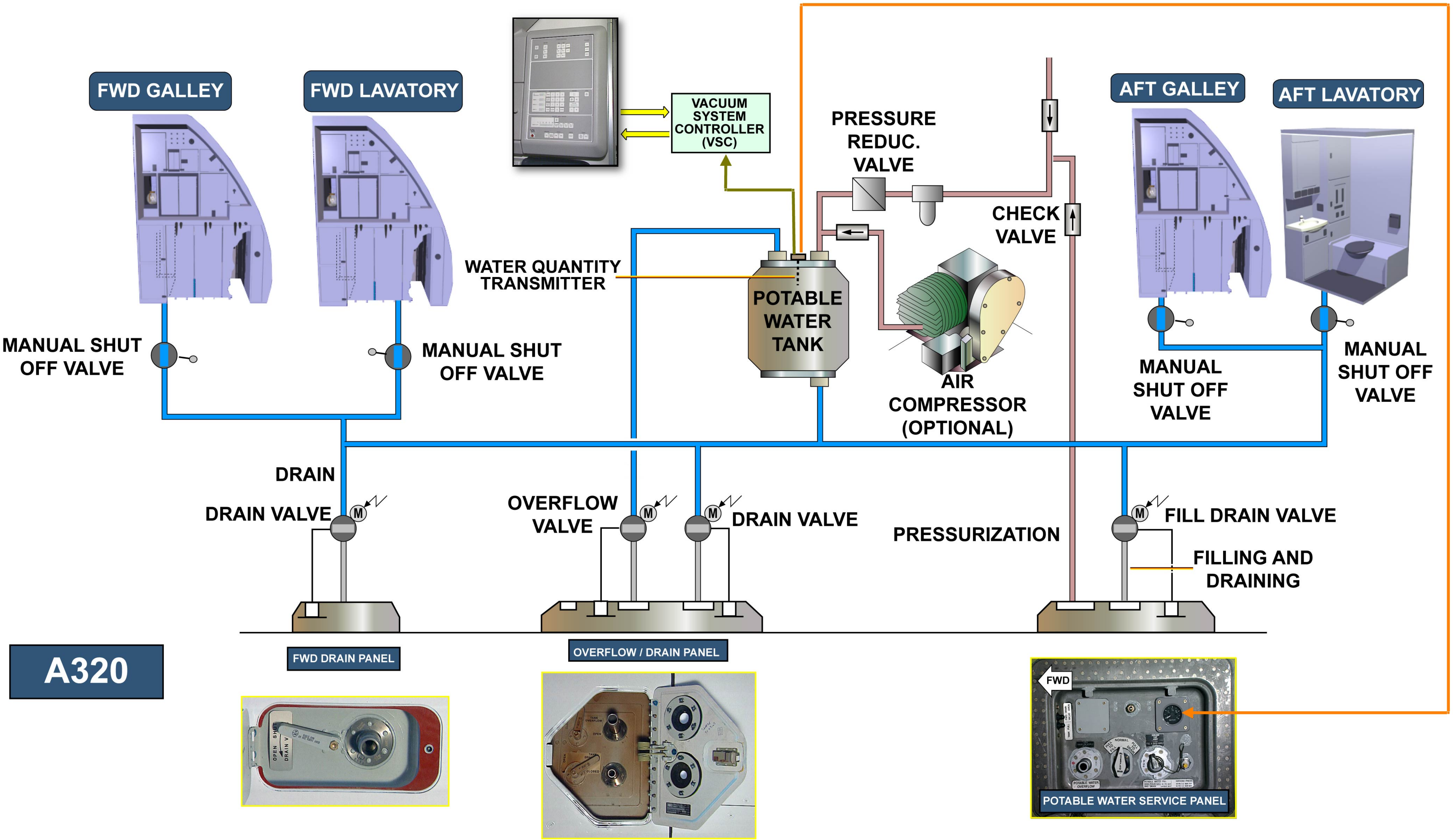

U670481_CFM56 - U3QT0T0 - UM38IBDEBRIEF02

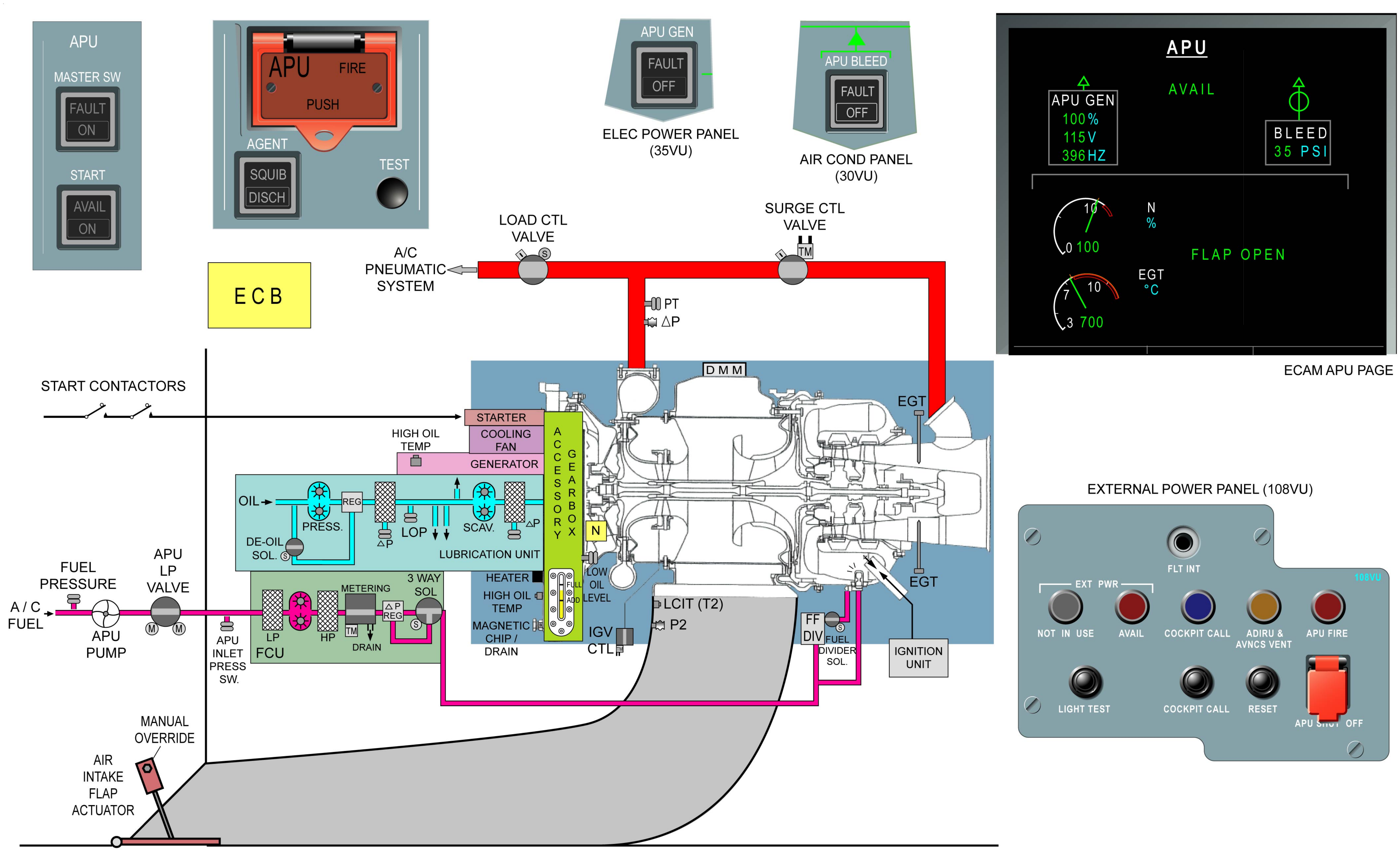

U670748I_CFM56 - U3QT0T0 - UM49IADEBRIEF01

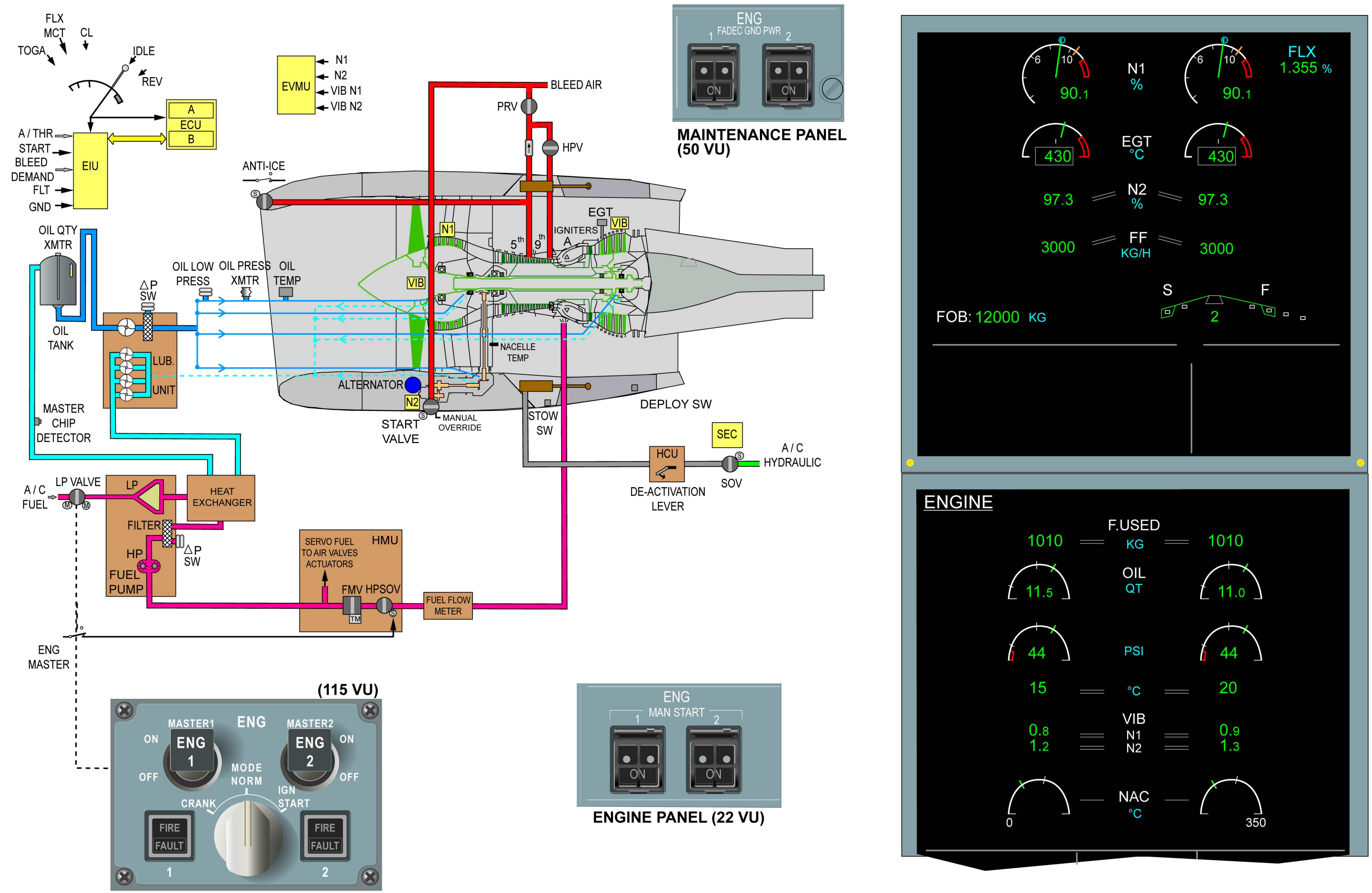

U707481_CFM56 - U3QT0T0 - UM70IADEBRIEF03